LL5007 BRASS SWING CHECK VALVE

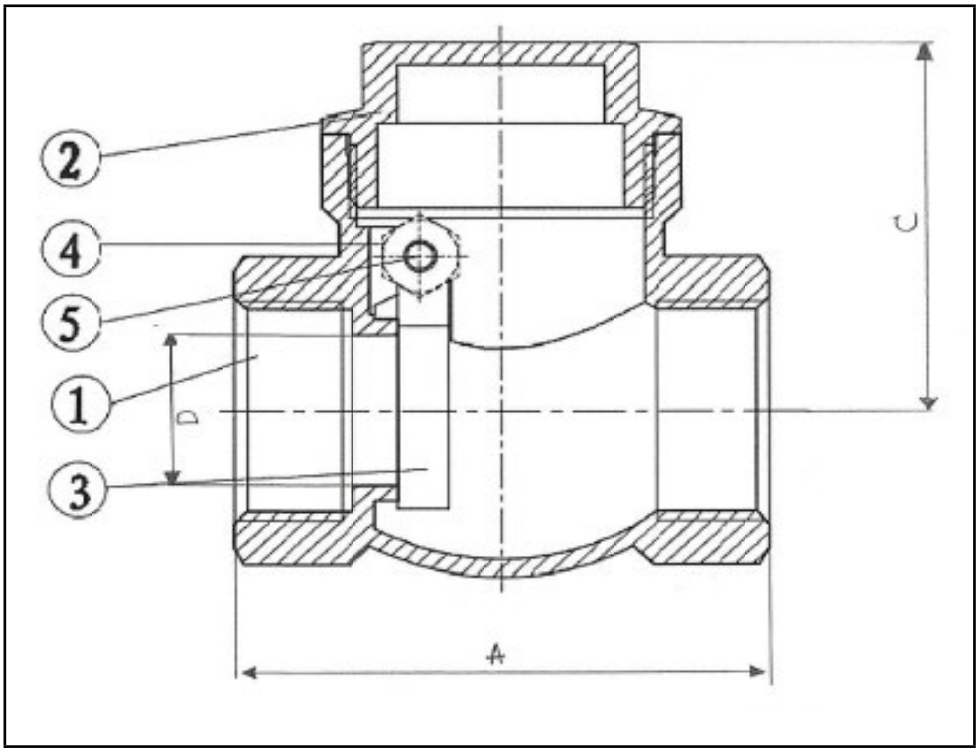

NO	Parts	Material
1	Body	Brass
2	Bonnet	Brass
3	Seal Board	Brass
4	Screw	Brass
5	Steam	Brass

BRASS SWING CHECK VALVE

- Suitable for hot and clod water, compressed air, oils.

- minimum and maximum working temperature: -10°C, 100°C.

- Threads : ISO228 (equivalent to DIN259 and BS2779)

Dimension:mms	1/2”	3/4”	1”	1.1/4”	1.1/2”	2”	2.1/2”	3”	4”
A	47.5	56	63	71	80.5	93	108	125	158
C	34.5	39	46.5	51	59.5	67	77	84	102
D	14	18	22	28	33.5	43	53	64	85
PN	16	16	16	16	16	16	16	16	16